CSE 320 - Computer Networks

LAB Session 1

09.02.2026

Packet Tracer:
https://www.packettracernetwork.com/download/download-packet-tracer.html
https://skillsforall.com/resources/lab-downloads?courseLang=en-US

Packet Tracer Everywhere: https://github.com/PTAnywhere/ptAnywhere-installation

1. Physical Look of Devices:

a. Data formats:

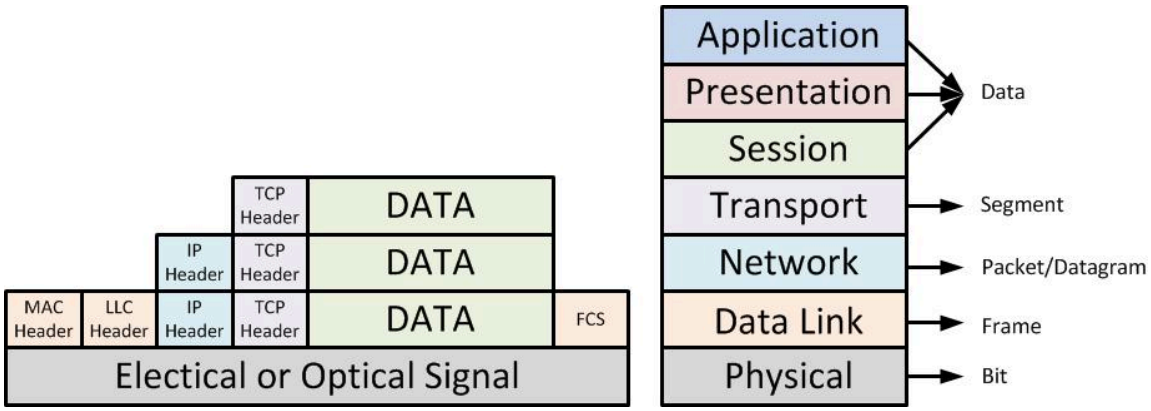

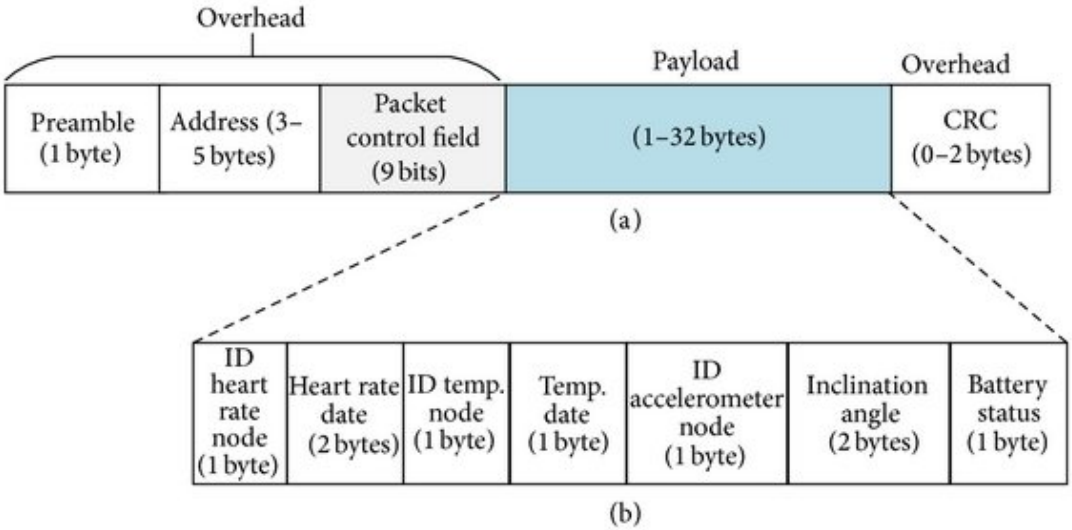

b. Switch:

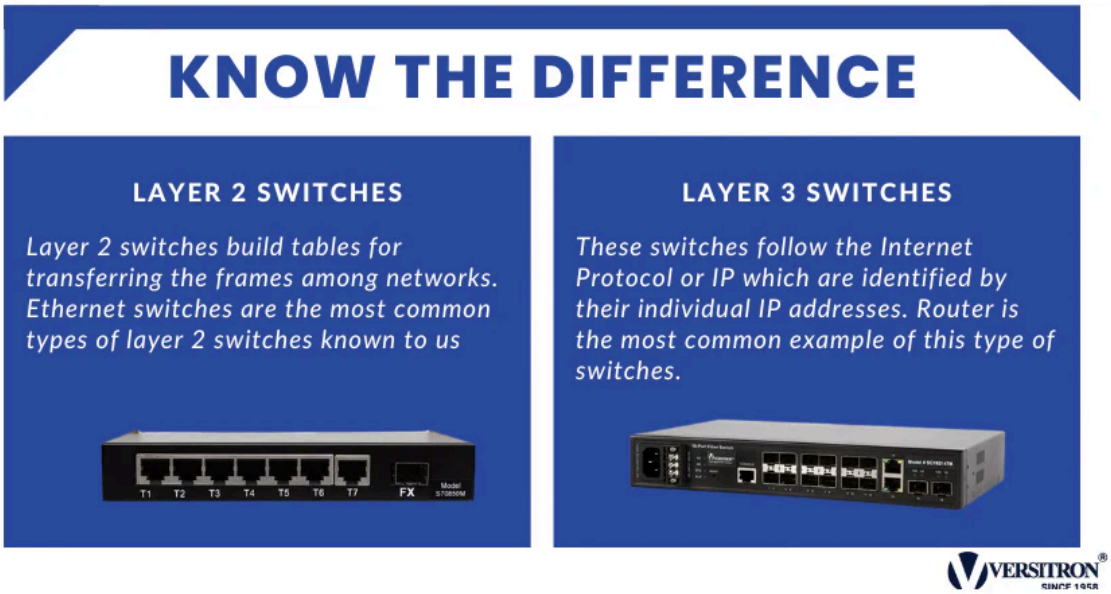

c. Router

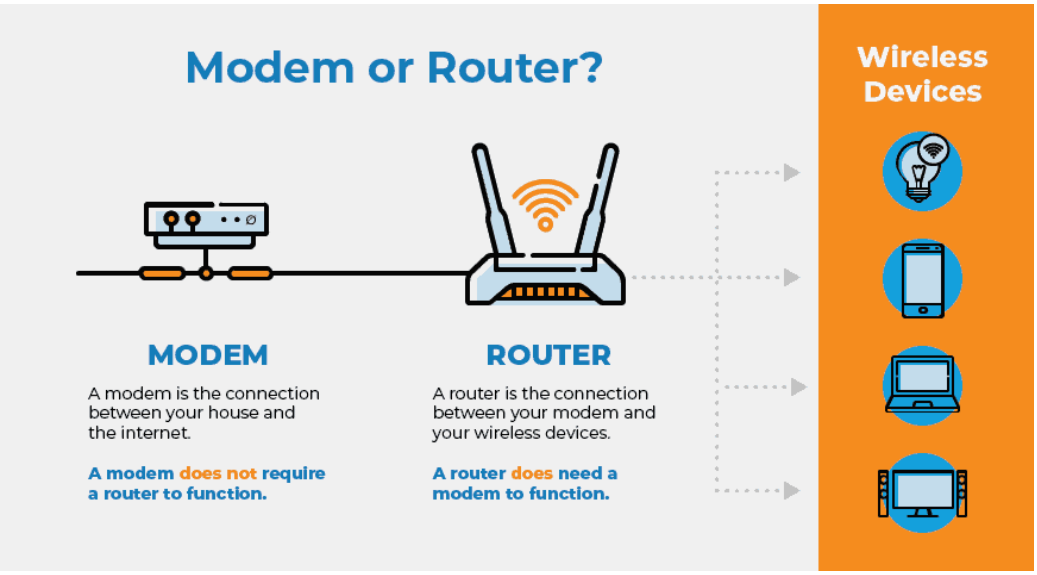
Modem or Router?
Wireless Devices
MODEM
A modem is the connection between your house and the internet.
A modem does not require a router to function.
ROUTER
A router is the connection between your modem and your wireless devices.
A router does need a modem to function.

d. Cables

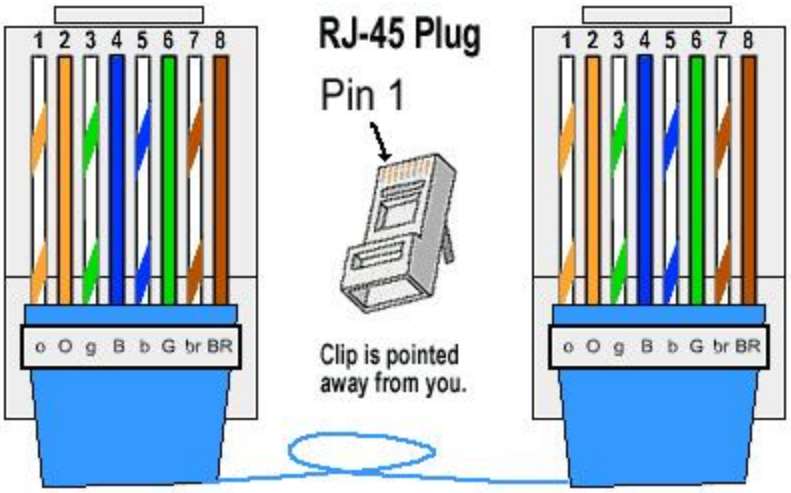

- **T568A/T568B cabling standard**
- **RJ45 (Registered Jack 45) = a.k.a. modular 8-position, 8-contact (8P8C) connector**
- **popular types including Cat 5e, Cat 6, Cat 6a, Cat 7, and STP/UTP cables.**

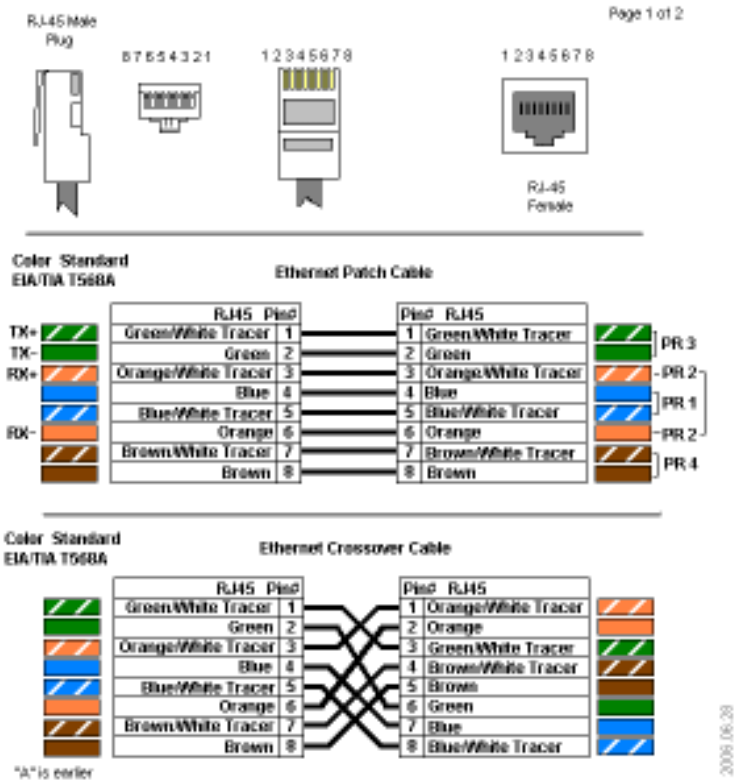

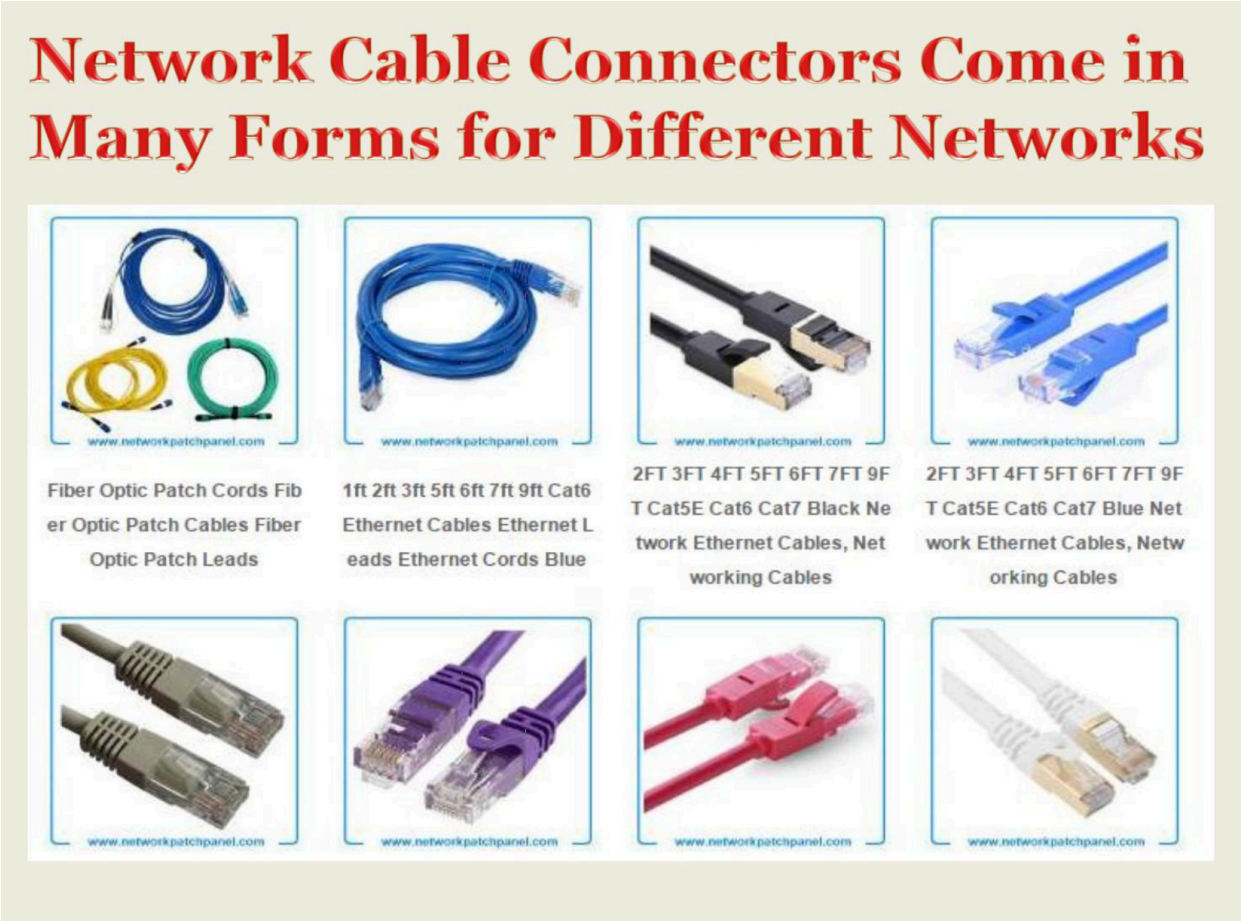
Network Cable Connectors Come in Many Forms for Different Networks
Fiber Optic Patch Cords Fiber Optic Patch Cables Fiber Optic Patch Leads
1ft 2ft 3ft 5ft 6ft 7ft 9ft Cat6 Ethernet Cables Ethernet Leads Ethernet Cords Blue
2FT 3FT 4FT 5FT 6FT 7FT 9FT Cat5E Cat6 Cat7 Black Network Ethernet Cables, Networking Cables
2FT 3FT 4FT 5FT 6FT 7FT 9FT Cat5E Cat6 Cat7 Blue Network Ethernet Cables, Networking Cables
www.networkpatchpanel.com

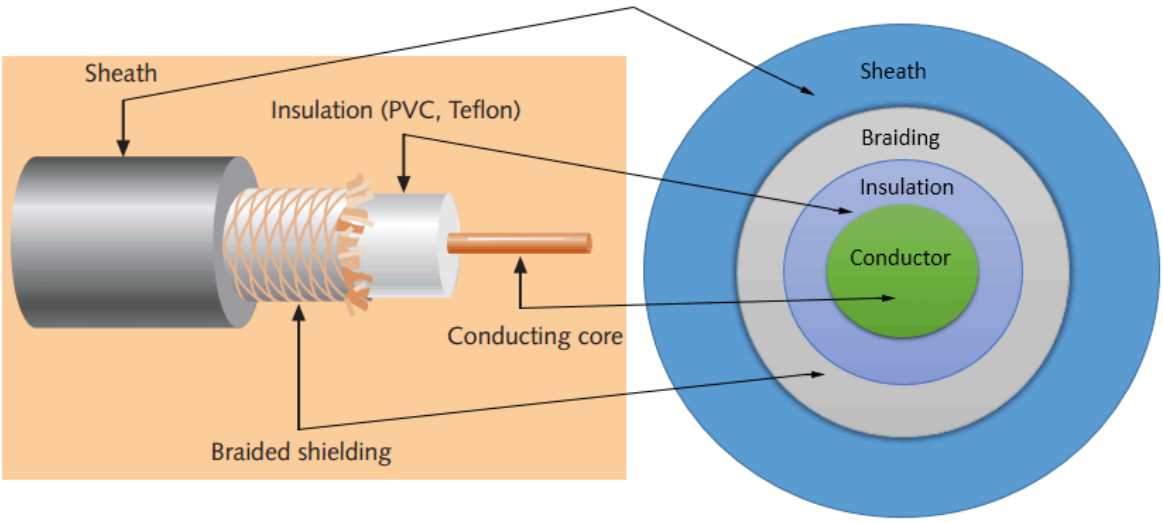
Sheath
Insulation (PVC, Teflon)
Conducting core
Braided shielding
Sheath
Braiding
Insulation
Conductor

e. Ports

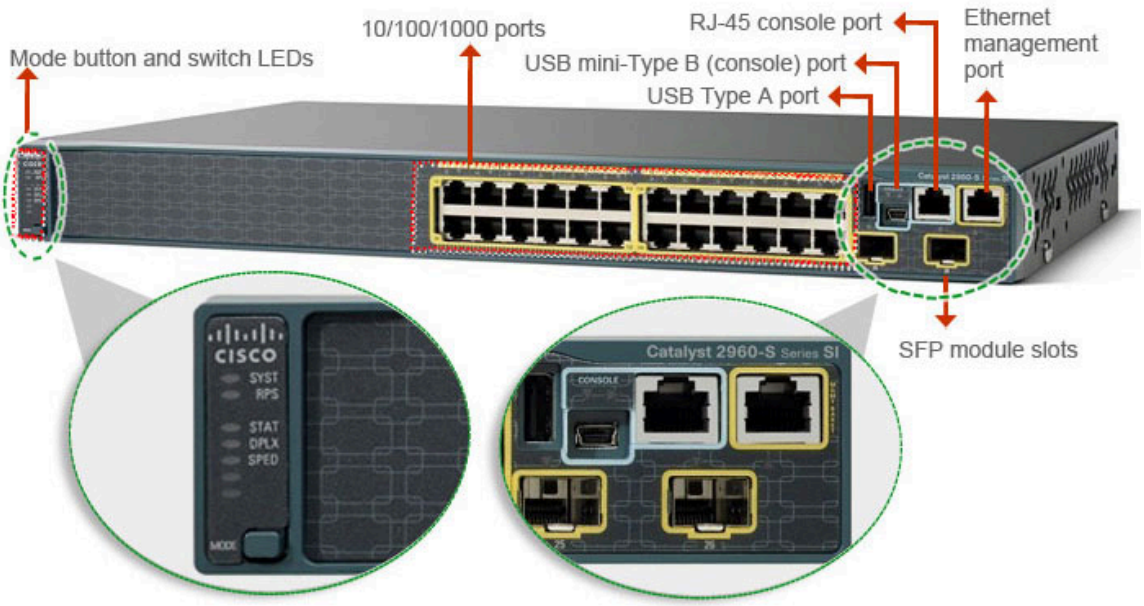
Mode button and switch LEDs
10/100/1000 ports
RJ-45 console port
USB mini-Type B (console) port
USB Type A port
Ethernet management port
SFP module slots
CISCO
SYST
RPS
STAT
DPLX
SPED
MODE
Catalyst 2960-S Series SI
CONSOLE

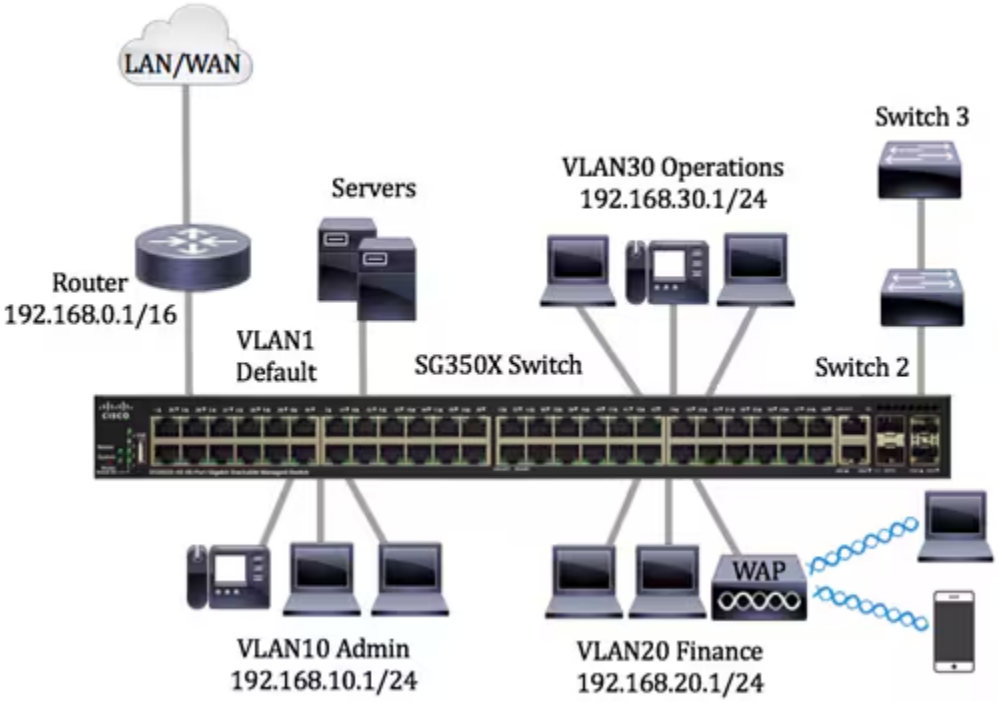
LAN/WAN
Switch 3
Servers
VLAN30 Operations
192.168.30.1/24
Router
192.168.0.1/16
VLAN1
Default
SG350X Switch
Switch 2
WAP
VLAN10 Admin
192.168.10.1/24
VLAN20 Finance
192.168.20.1/24

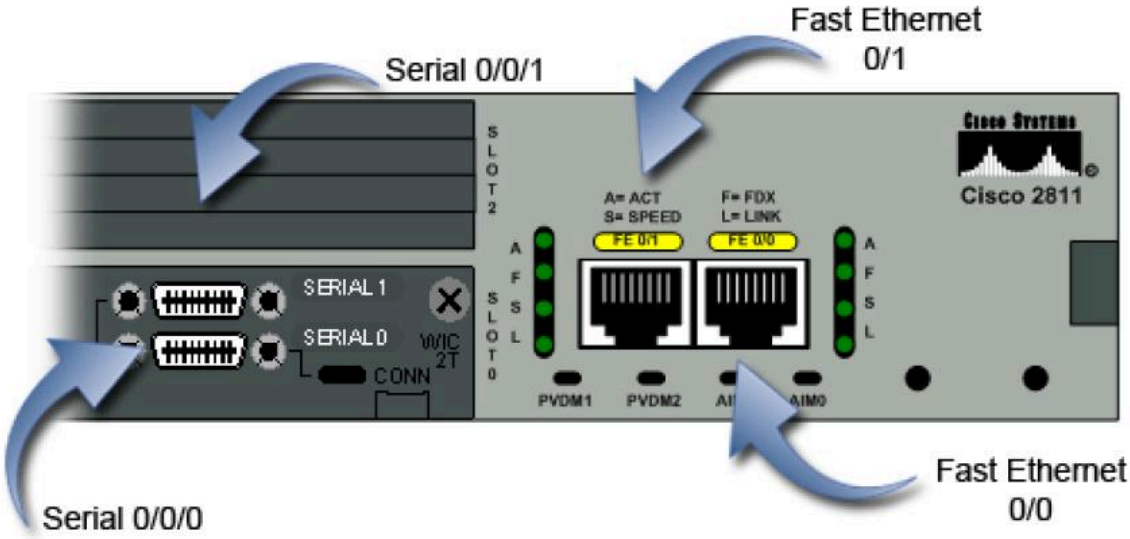

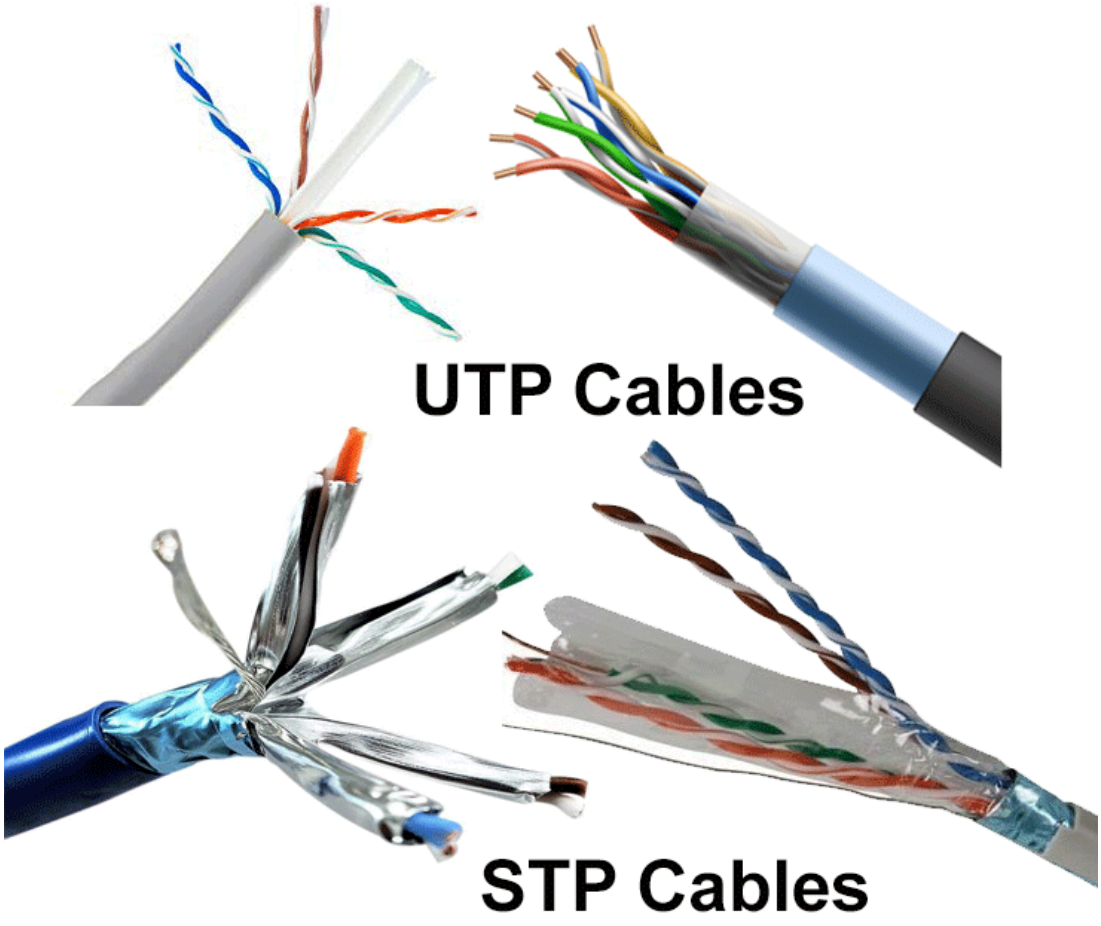

2. Launch and Getting to Know

a. Launch a new workspace:

File/New

b. ***Different Workspaces:***

The **Logical Workspace** allows you to build a logical network topology without regard to its physical scale and arrangement. The **Physical Workspace** also allows you to create a topology and, at the same time, arrange devices physically in cities, buildings, and wiring closets.

c. ***Tool Box at the bottom section:***

There are Networking Devices(Routers, Switches, Hubs, Wireless Devices etc), End Devices (Pc/Laptop/Server/etc, Smart Home appliances, Smart City related devices such as CO detectors, batteries, etc, Industrial automation devices, Power Grid devices), Useful Components for Automation (Actuators, sensors,boards), Connections(Types of Cables, Cabling structures), Misc.

d. ***Additional Tip:*** From Options/Preferences make sure the following section is checked. This will allow you to see where the cable is connected.

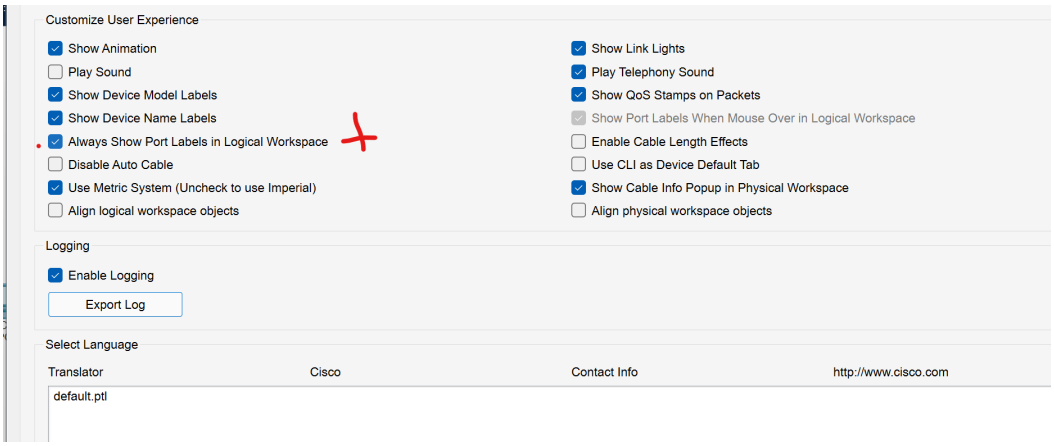

3. Setting Up Devices:

Add Devices: Click on the "Devices" icon in the bottom left corner. Select and drag a switch (e.g., 2960) and two PCs to the logical workspace.

4. Connecting Devices:

a. ***Choose a Cable:*** Click on the "Connections" icon (looks like a lightning bolt) in the bottom left corner.

b. ***Connect Devices:*** For PCs to switch connections, use a straight-through cable (usually copper). Click on the cable, then click on a PC, select FastEthernet0, then click on the switch, and choose an available port (e.g., FastEthernet0/1).

c. ***Repeat*** the process for the other PC, connecting it to a different port on the switch.

5. Configuring the Devices:

a. ***Configuring PC IP Addresses:***

- **Configure PC IP Settings: Click on a PC, go to the "Desktop" tab, and then click on "IP Configuration". Enter an IP address (e.g., 192.168.1.2), subnet mask (usually 255.255.255.0), and default gateway (optional for this setup).**
- **Repeat for the other PC with a different IP address (e.g., 192.168.1.3).**

b. *Basic Switch Configuration*

- Access Switch CLI: Click on the switch, go to the "CLI" tab, press "Enter" to access the command-line interface.
- Enter Global Configuration Mode: Type "`enable`" and press Enter. Then type "`configure terminal`" and press Enter.
- Assign Hostname (Optional): Type "`hostname Switch1`" to name your switch (or any name you prefer).

6. Testing the Network:

a. *Open Command Prompt on PC:* Go back to one of the PCs, open the "Command Prompt" from the Desktop tab.

b. *Ping the Other PC:* Type "`ping 192.168.1.3`" (or the IP of the other PC) and press Enter. You should see replies if everything is set up correctly.

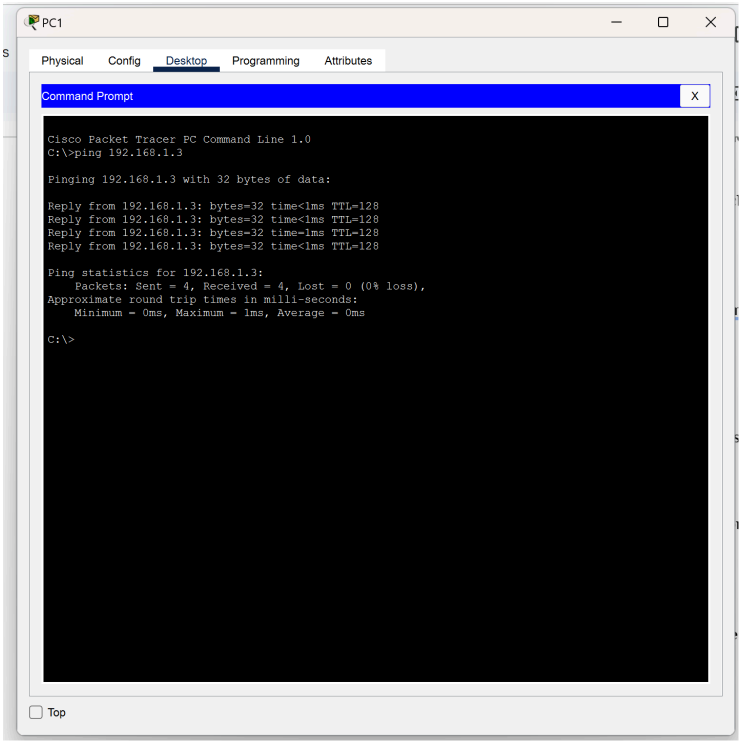

7. Save the Project:

Go to "File" > "Save As" to save your Packet Tracer file for future reference or further experimentation.

8. Troubleshooting tips

- **PCs cannot communicate:**
  - **i. Check if the correct IP addresses and subnet masks are assigned.**
  - **ii. Ensure the cables are connected to the right interfaces.**

iii. **If using a switch, check if ports are enabled using show interfaces status.**

- **Packet loss in ping tests:**
  i. **Run `show mac address-table` on the switch to verify if the PCs' MAC addresses are detected.**
  ii. **Use `show ip interface brief` on the router to check if the interfaces are up.**

9. (Optional) Expand Configuration Steps

a. Enable and Secure Switch Ports

- **Disable unused ports**

```
Switch(config)# interface range FastEthernet0/2-24
Switch(config-if-range)# shutdown
```

- **Enable port security to allow only one MAC address**

```
Switch(config)# interface FastEthernet0/1
Switch(config-if)# switchport mode access
Switch(config-if)# switchport port-security
Switch(config-if)# switchport port-security maximum 1
Switch(config-if)# switchport port-security violation restrict
Switch(config-if)# switchport port-security mac-address sticky
```